EPC-0621E2 – DATA SHEET

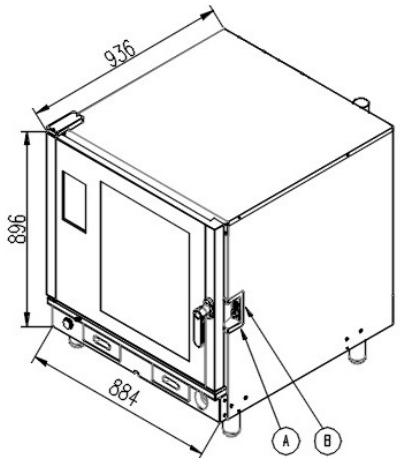

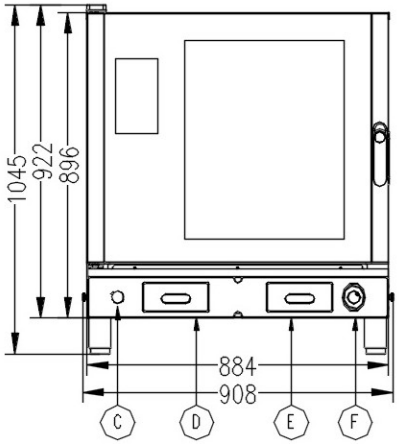

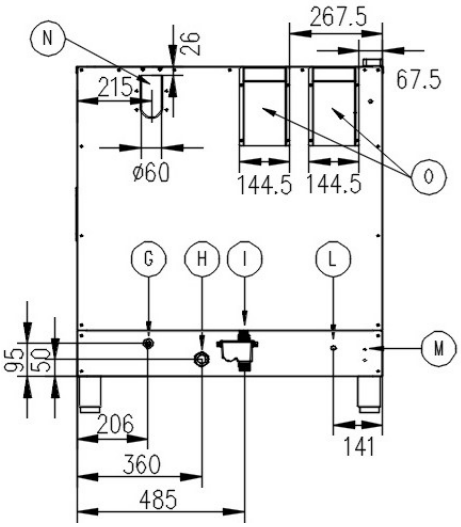

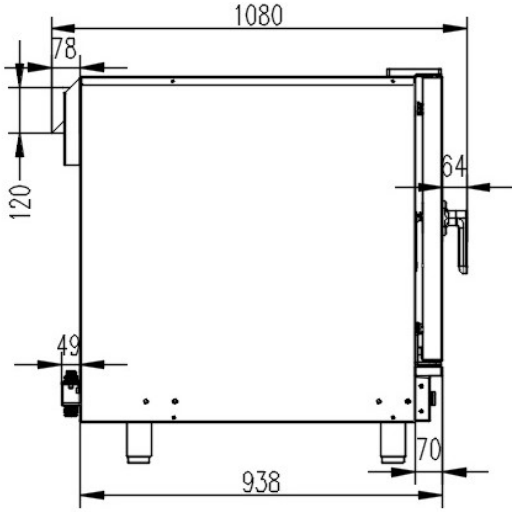

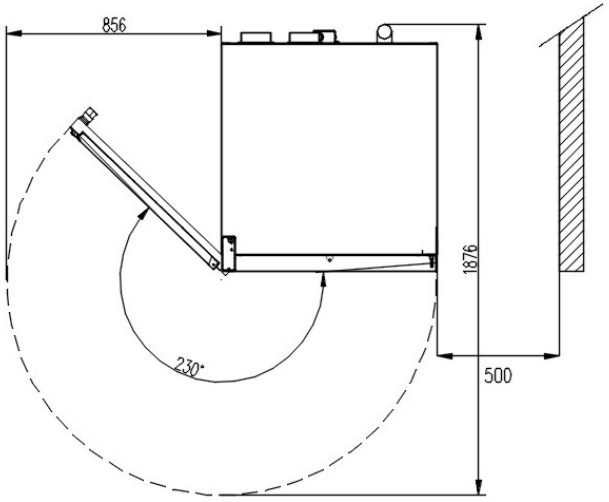

A	POWER SWITCH
B	CORE PROBE INPUT
C	USB SOCKET
D	BRIGHTENER CONTAINER
E	DETERGENT CONTAINER
F	HAND SHOWER
G	INLET WATER WITH ½" FEMALE CONNECTION
H	POWER CORD CABLE GLAND
I	DRAIN BOX
L	SAFETY THERMOSTAT RESET
M	EQUIPOTENTIAL TERMINAL BOARD
N	CHIMNEY
O	AIR EXTRACTOR

Sede legale Italia
Viale Duca d'Aosta, 3 – 21052 Busto Arsizio (VA)
Tel. ufficio +39 02 9425037
P.IVA e C.F. 03418710129

Sede operativa Italia
Via F. Baracca, 3 – 61037 Mondolfo (PU)
E-mail info@atosa-italy.it

Trays quantity:	6
Trays type:	**GN 2/1 - EN 400x600**
Distance between trays:	**82 mm**
Maximum load for trays:	**36 kg**
Maximum total load:	**180 kg**
Chamber capacity:	**213 liters**
Voltage supply:	**380-415 Vac (400V nominal) 3ph+N+PE**
Power supply Frequency:	**50-60 Hz**
Nominal Power:	**17kW at 380V - 20,1kW at 415V**
Maximum absorption per phase:	**33 A**
Minimum power cable section:	**5G6 mmq (H07RN-F)**

Protection Class:	**IPX4**
Drain pipe internal diameter:	**32 mm**
Chimney tube external diameter:	**60 mm**
Operating temperature range:	**from 30°C to 260°C**
Weight without packaging:	**160,4 kg**
Weight with packaging:	**207,7 kg**
Ideal inlet water pressure:	**2-3 bar**
Water hardness:	**< 8° d (german degrees)**
Water connection:	**Inlet hose supply with ½" connection**
Oven maximum size (WxHxD):	**908 x 922 x 1080 mm**
Packing measurements (WxHxD):	**985 x 1065 x 1160 mm**

Atosa catering equipment s.r.l. reserves the right to make changes to the specifications and technical and/or functional characteristics of the product at any time and without notice.

EPC-0621E2_DTS_EN_05

Sede legale Italia
Viale Duca d'Aosta, 3 – 21052 Busto Arsizio (VA)
Tel. ufficio +39 02 9425037
P.IVA e C.F. 03418710129

Sede operativa Italia
Via F. Baracca, 3 – 61037 Mondolfo (PU)
E-mail info@atosa-italy.it